REVISION No. 9

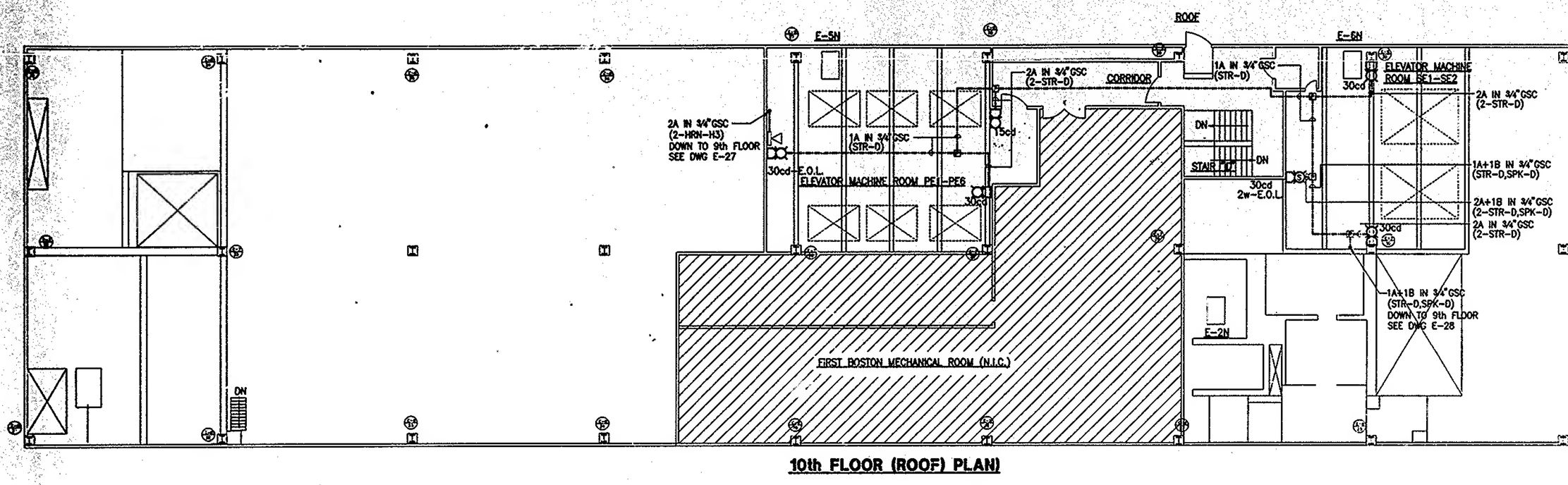

10th FLOOR (ROOF) PLAN)

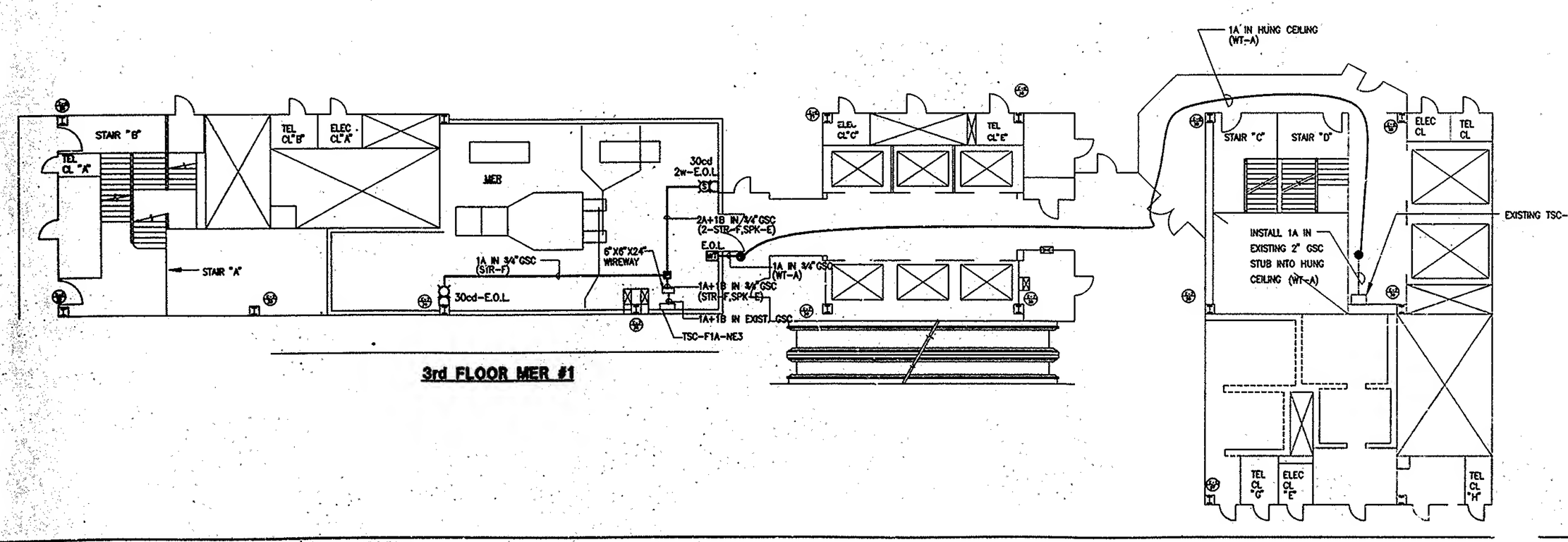

3rd FLOOR MER #1

FILE NAME: Y:\WTc-861.571\5WTC\E-21.dwg plotted on 3/6/1999 by BROYZMAN